F80

Name / Title : GAS LIFT

KGS Samplel Number : KGP4140-5035C5448 CAN CHROME 4

KGS Samplel Number : KGP4140-5035C5449 CAN BLACK 2.

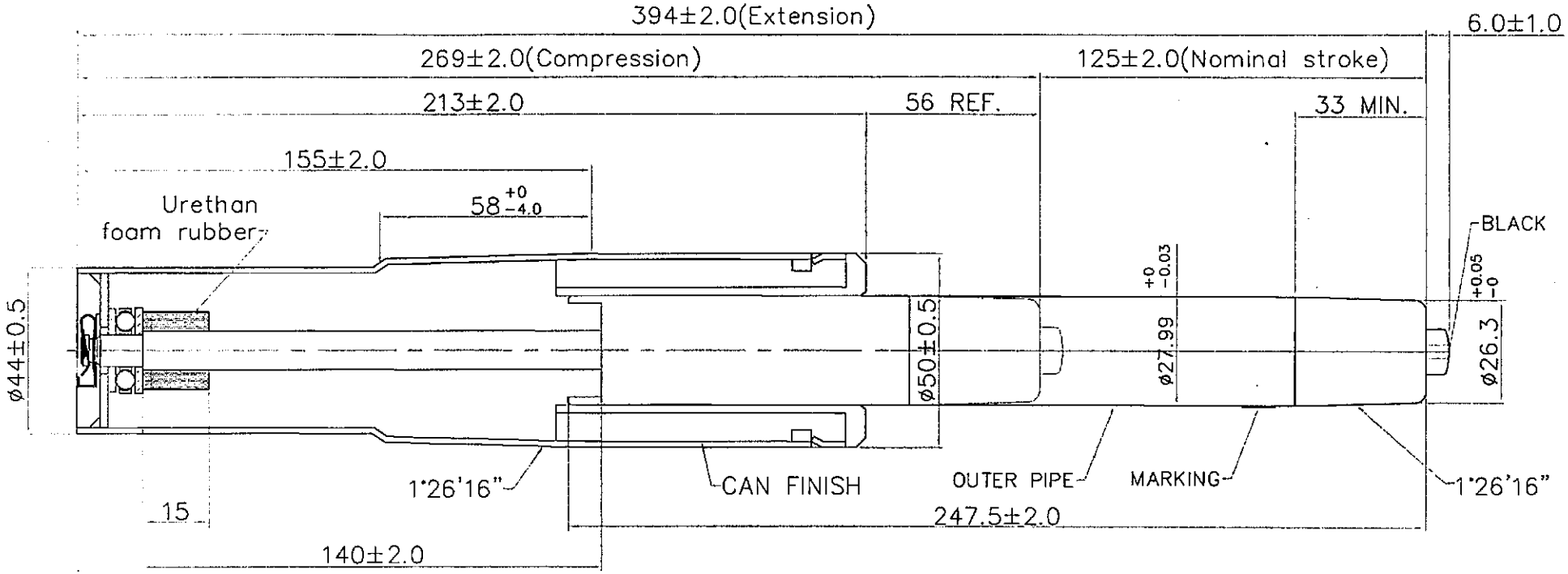


NOTES
1. GAS PRESSURE : F1=350 N $^{+40N}_{-20N}$ ,FR MAX = 80N
2. OUTER PIPE : BLACK HEAT TREATMENT(2.5T)
3. CAN FINISH : CHROME PLATING&BLACK PAINTING(1.5T)

GAS PRESSURE DIAGRAM

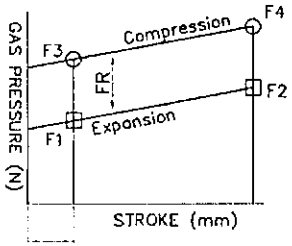


MARKING SPEC

KGS MADE BY KGS CO.,LTD 07/14
DO NOT OPEN OR HEAT! HIGH PRESSURE!
TYPE KGL DIN 4550 KLASSE 4.

| REV | DATE | DESCRIPTION | DESIGNED | CHECKED | APPROVED |
|---|---|---|---|---|---|
| △ | | | | | |
| △ | | | | | |
| △ | | | | | |
| △ | | | | | |

| NO | PART NO. | PART NAME | Q'TY | MATERIAL | REMARKS |
|---|---|---|---|---|---|
| | | | | | |

| | | | |
|---|---|---|---|
| APPROVED | | TITLE : GAS LIFT | |
| CHECKED | | KGS Korea Gas Spring CO.,LTD | |
| DESIGNED | | | |
| DATE 2014.02.14 | TOL X = ±0.5 XX = ±0.1 | SCALE N/S | DRAW-NO |